Open in Adobe Acrobat to switch to other languages.

ENGLISH

EN DE NL SE DA FI PL FR

Setup - ETRA laptop stand with pivotable document holder

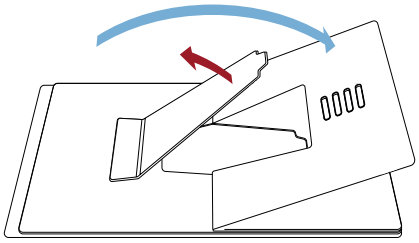

1. Unfold both rear and prop legs.

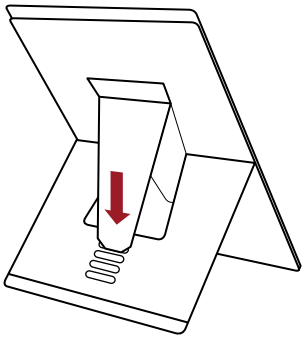

2. Position the stand upright and select one of the four angle settings.

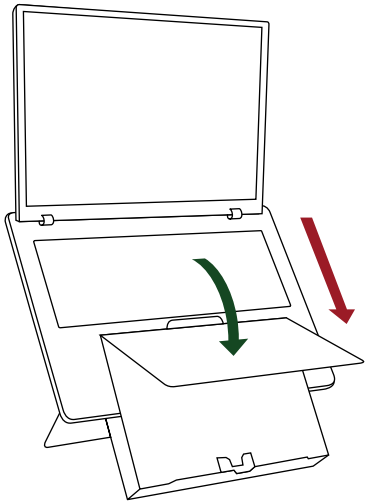

3. Open pivotable document holder and place laptop inside.

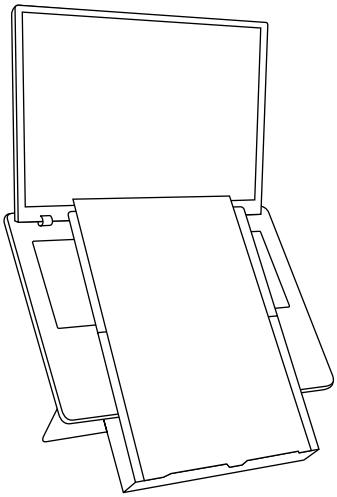

4a. Close laptop holder and place document on the stand.

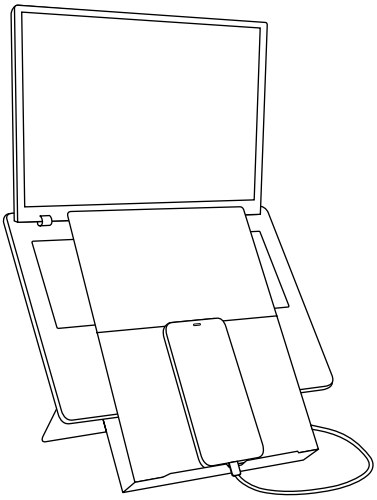

4b. Or the tablet/phone, placing the charging lead in the slot.

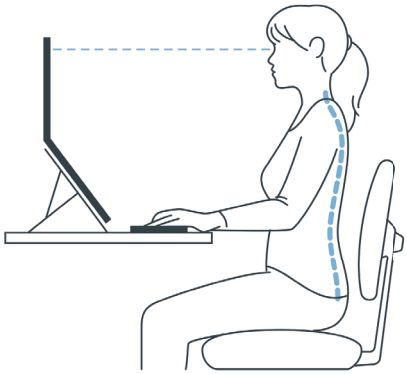

5. Position your laptop about an arm's length away. Add an external keyboard and mouse to create an ergonomic workstation.

standivarius